wiesner hager concept

delv Konferenztisch/ delv conference table

Montageanleitung / assembly instructions

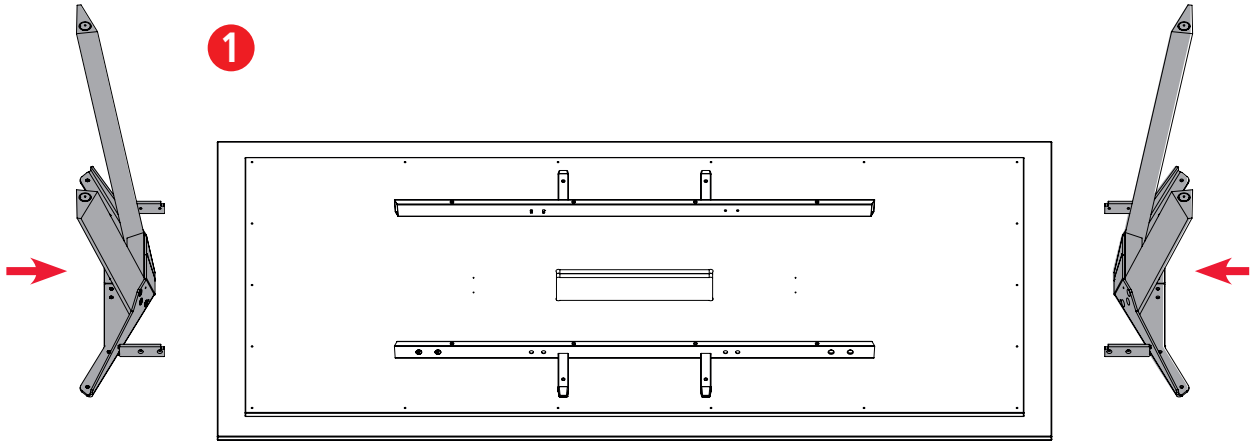

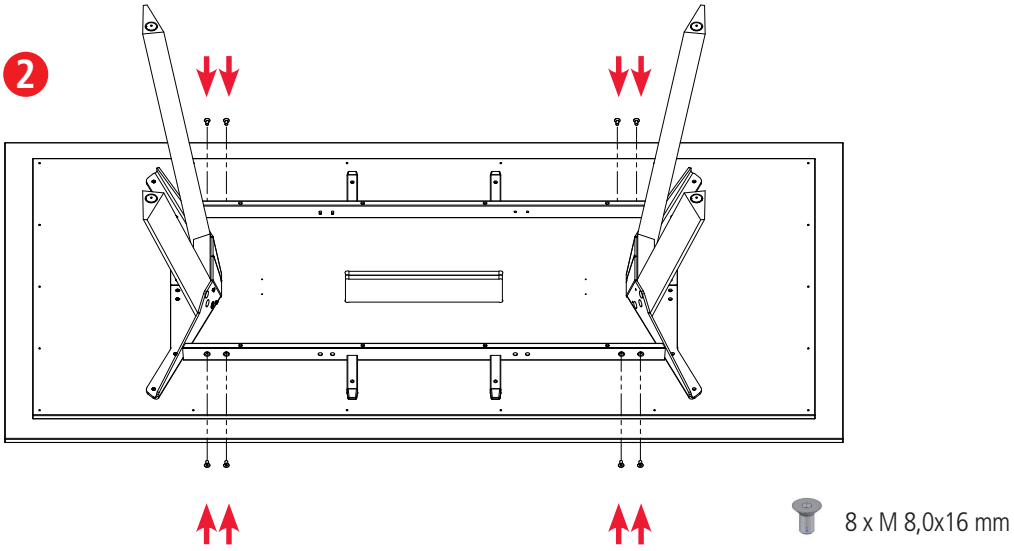

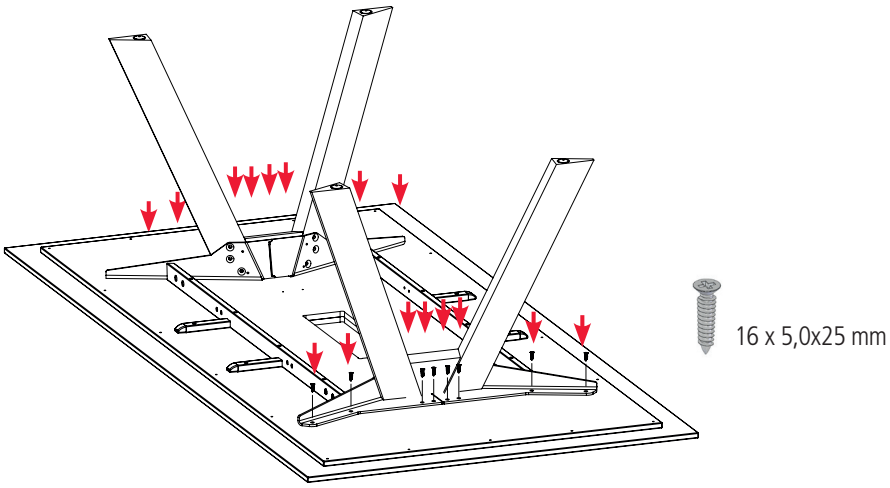

wiesner hager concept

4

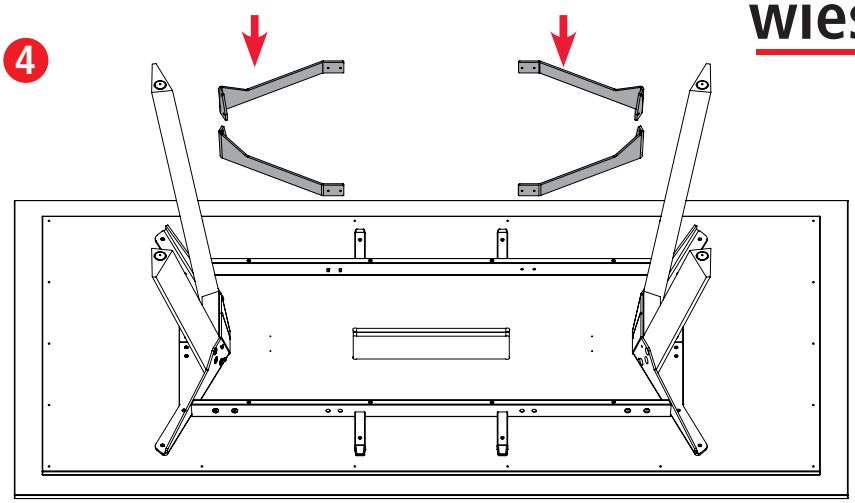

5

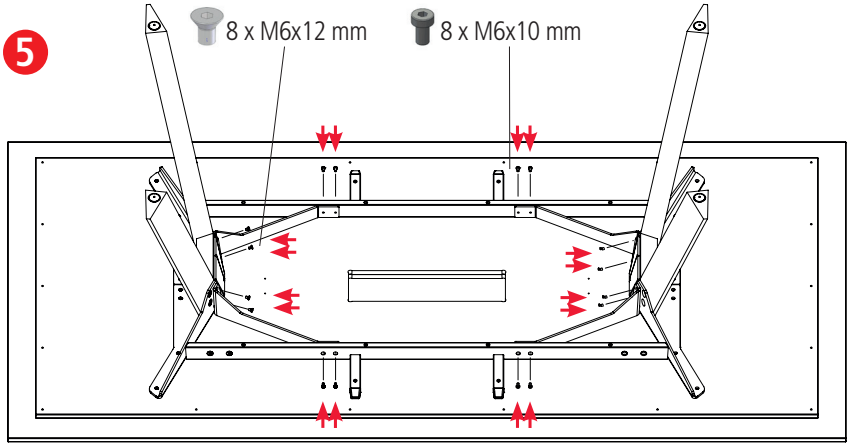

6

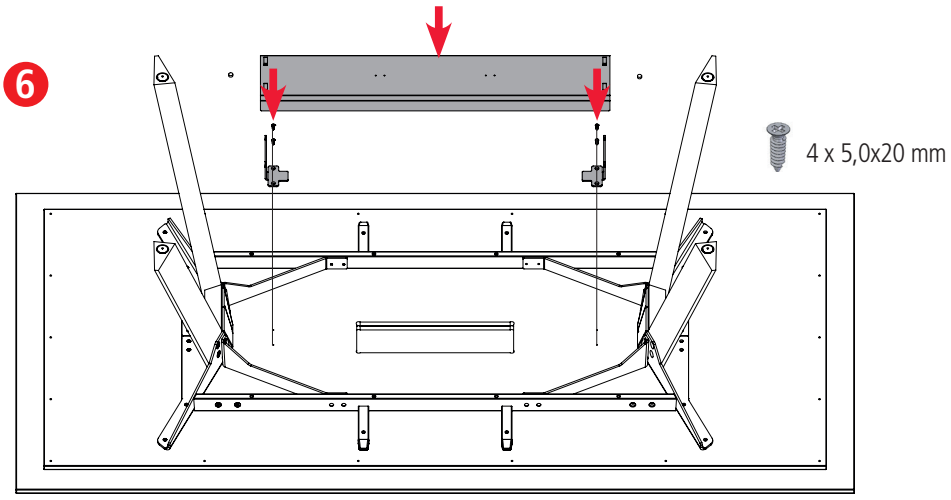

7

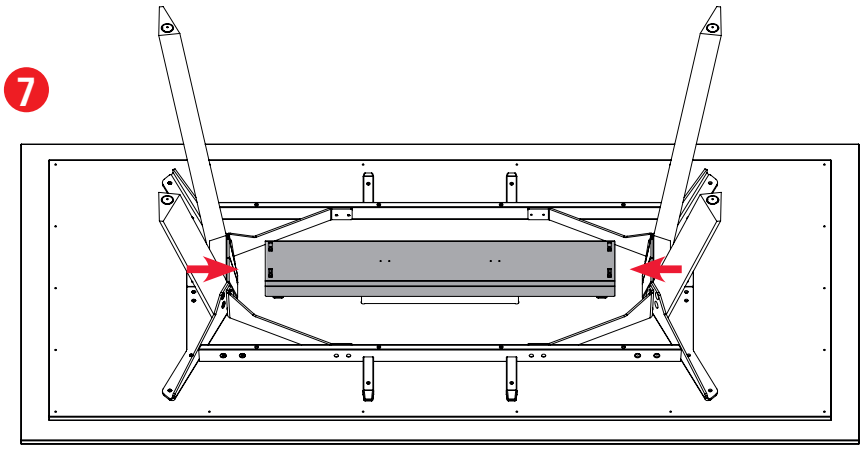

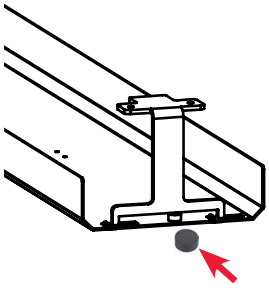

2 x Magnete / magnets